800 W Platinum server power supply

EVAL_800W_PSU_4P_C7

Kutschak Matteo-Alessandro (IFAT PMM ACDC AE)
Garcia Rafael (IFAT PMM ACDC AE GTMS)
Zechner Florian (IFAT PMM ACDC AE)

Table of Contents

1 General description

2 Efficiency results

3 Design concept

Copyright © Infineon Technologies AG 2017. All rights reserved.

Table of Contents

1 General description

2 Efficiency results

3 Design concept

Copyright © Infineon Technologies AG 2017. All rights reserved.

General description EVAL_800W_PSU_4P_C7

The **"EVAL_800W_PSU_4P_C7"** - Evaluation board shows an Infineon system solution for an 800 W server power supply which achieves the 80Plus® Platinum standard. The power supply is composed of a continuous conduction mode (CCM) power factor corrector (PFC) converter and a half-bridge LLC DC-DC converter. Featuring CoolMOS™ C7 in TO-247 4pin using the Kelvin-Source concept IPZ60R099C7, CoolMOS™ C7 IPP60R180C7, CoolSiC™ Schottly Diode (IDH06G65C5), OptiMOS™ low voltage Power MOSFET in SuperSO8 BSC009NE2LS5I as O-ring and BSC014N04LS in SyncRec configuration, Low side gate driver 2EDN7524F, high voltage - high speed driver IC 1EDI20N12AF, step-down (buck) IFX91041EJ V33 , QR CoolSET™ ICE2QR2280G and XMC1400 and XMC4200 industrial microcontroller.

Summary of Features:

- Input voltage: 90 -265Vac
- Output Voltage: 12V
- Output Power: 800W
- Switching frequency:
  - PFC 65kHz
  - LLC 150kHz
- Peak efficiency: >95%

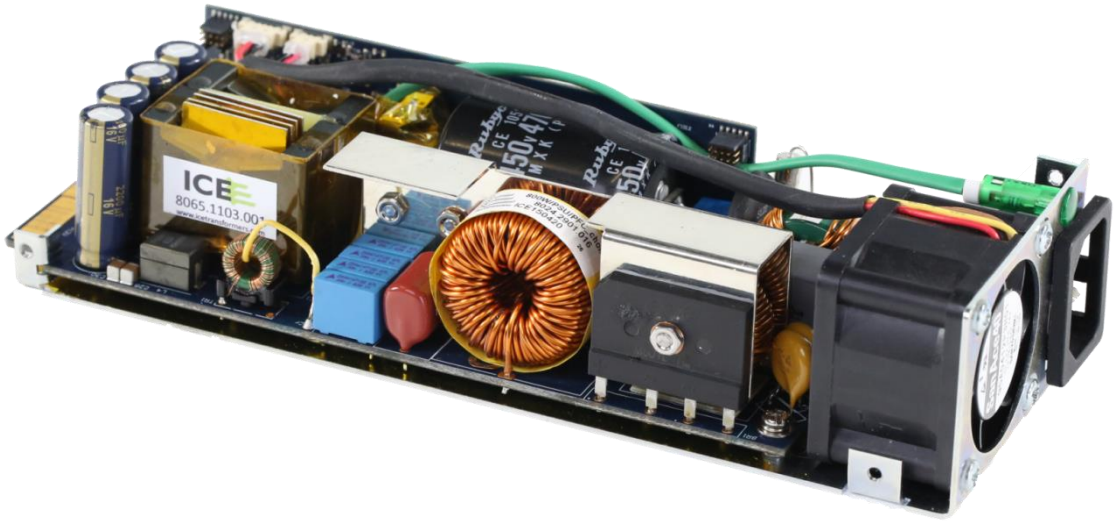

The following variants are available:

- 800 W 12 V LLC version with CoolMOS™ C7 TO-247 4Pin, **EVAL_800W_PSU_4P_C7**

Copyright © Infineon Technologies AG 2017. All rights reserved.

General description
Top view and stages

Top view of the 800 W server power supply. The distribution on the PCB of the different stages which compose the PSU is highlighted: AC input and EMI filter, PFC stage, LLC (DC-DC) stage and DC output, bias (auxiliary) power supply and control board.

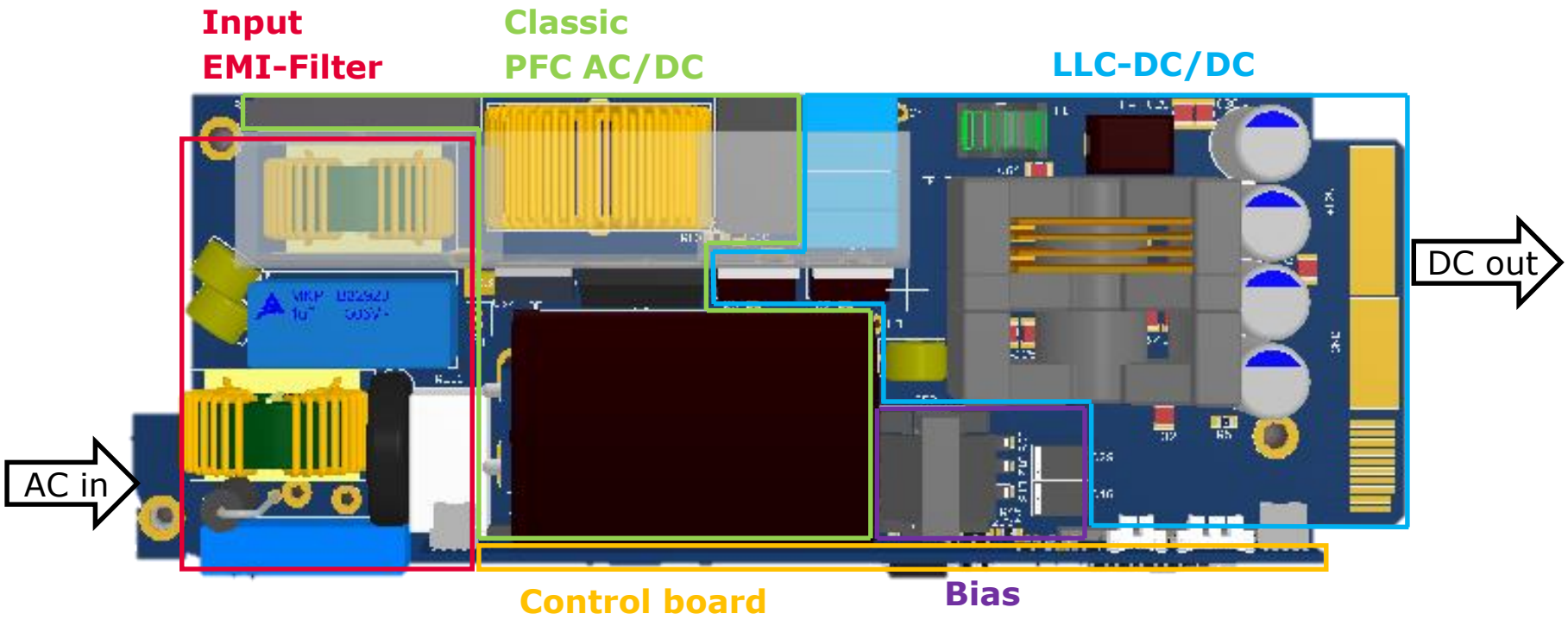

Copyright © Infineon Technologies AG 2017. All rights reserved.

Example of system understanding: Infineon demo solution for 80Plus® Platinum standard AC-DC stage

800 W Platinum plus server power supply unit (PSU)	
V_{in}	90 V_{AC} – 265 V_{AC}
V_{in_nom}	230 V_{AC}
V_{out_nom}	12.2 V ± 2%
I_{out}	67 A
P_o	800 W
$f_{(PFC)}$	65 kHz
$f_{(LLC)}$	150 kHz
$Efficiency_{max}$	>95%

CoolMOS™ IPZ60R099C7
- ~50% reduction in turn-off losses (E_{oss})
- Performance in hard-switching topologies

CoolMOS™ IPP60R180C7
- Reduced E_{off}
- High body diode ruggedness

CoolSiC™ IDH06G65C5
- Improved $Q_c \times V_f$)
- V_{br} @ 650V

OptiMOS™ BSC009NE2LS5I
OptiMOS™ BSC014N04LS
- Best FOM $R_{DS(on)} \times Q_g$
- Best FOM $R_{DS(on)} \times Q_{oss}$

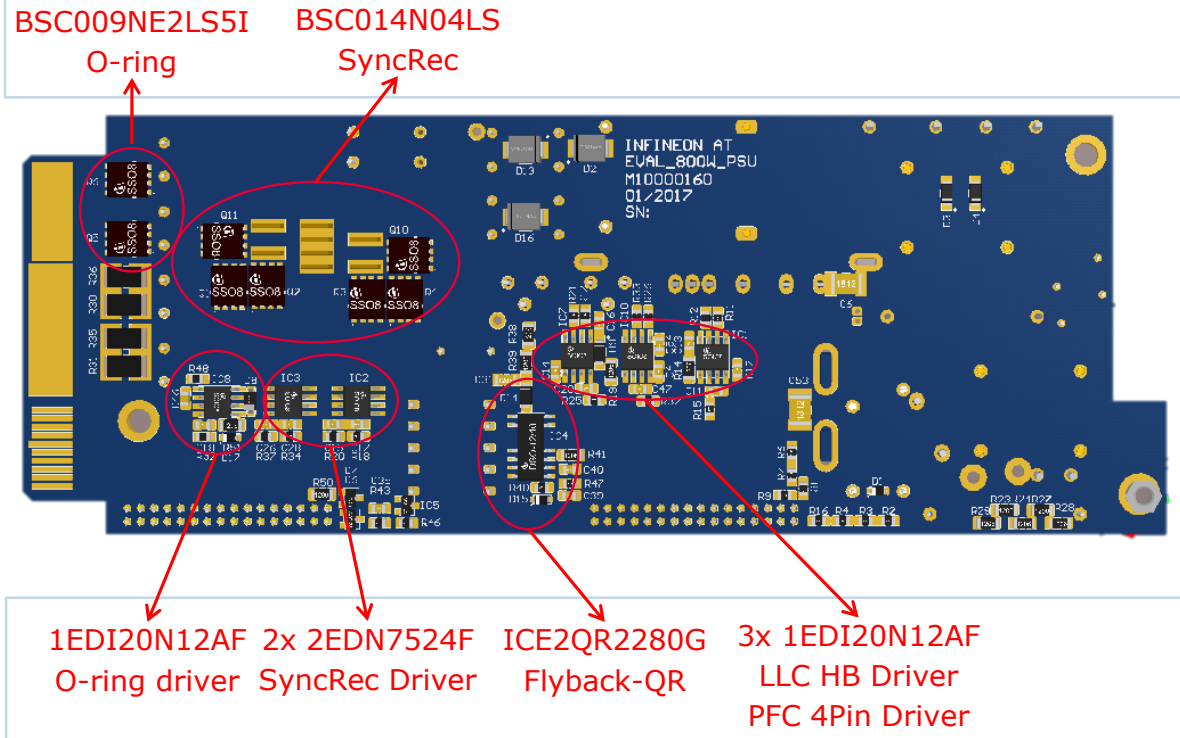

Copyright © Infineon Technologies AG 2017. All rights reserved.

Control Board

Infineon's 800 W Platinum plus server power supply unit (PSU) evaluation board

On the control card the XMC™ microcontrollers for primary and secondary side control are depicted, together with the digital isolator. The control card is designed to support PFC monitoring and PMBus communication.

PFC Controller

XMC1402-Q040X0128AA

- ARM® Cortex®-M0, 48MHz, Math coprocessor
- CPU Frequency: 48MHz (96MHz PWM)
- eFlash: 128kB including hardware ECC
- 16kB SRAM
- Package: PG-VQFN-40

LLC Controller

XMC4200-Q48K256 AB

- ARM® Cortex®-M4, 80MHz, incl. single cycle DSP MAC and floating point unit (FPU)
- 8-channel DMA + dedicated DMA for USB
- USB 2.0 full-speed device
- CPU Frequency: 80MHz
- eFlash: 256kB including hardware ECC
- 40kB SRAM
- Package: PG-LQFP-48

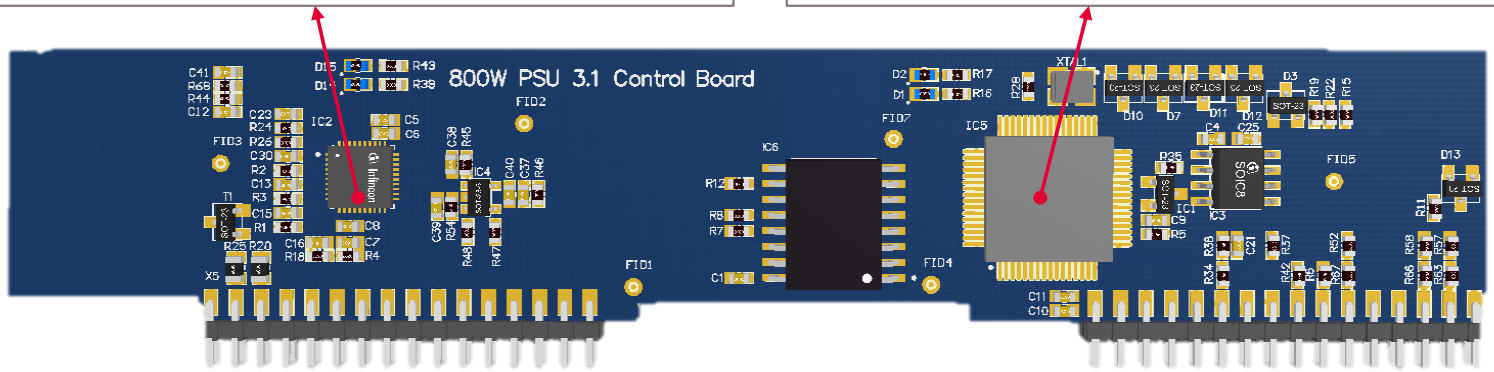

Copyright © Infineon Technologies AG 2017. All rights reserved.

Main power board:
EMI filter and PFC stage schematic

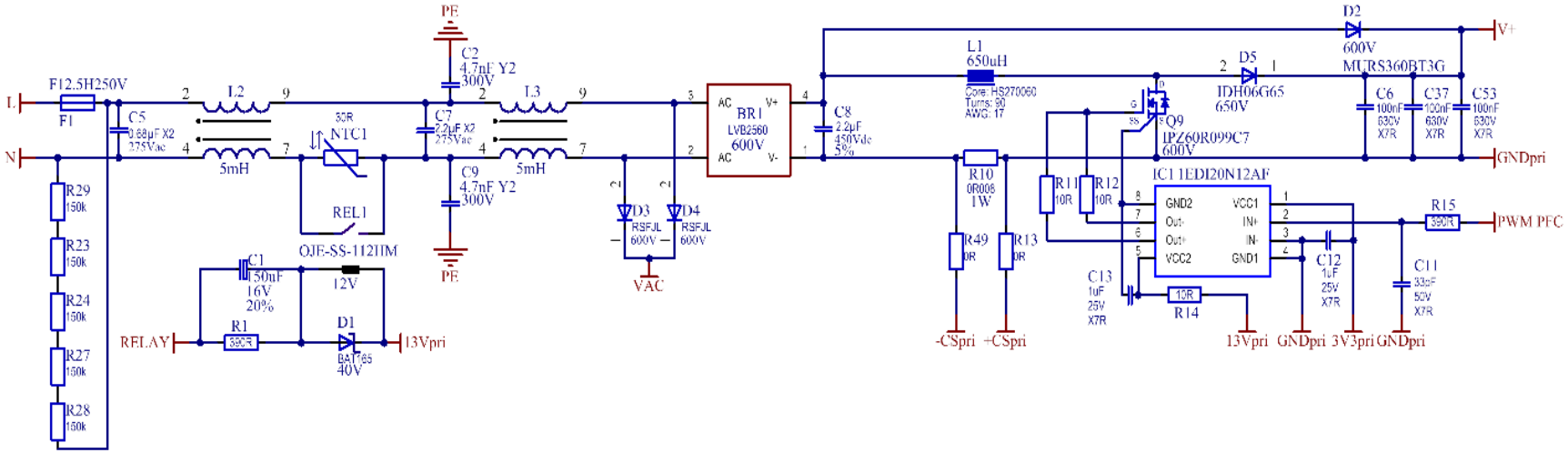

Copyright © Infineon Technologies AG 2017. All rights reserved.

Main power board
LLC and AUX SMPS stage schematic

LLC stage schematic

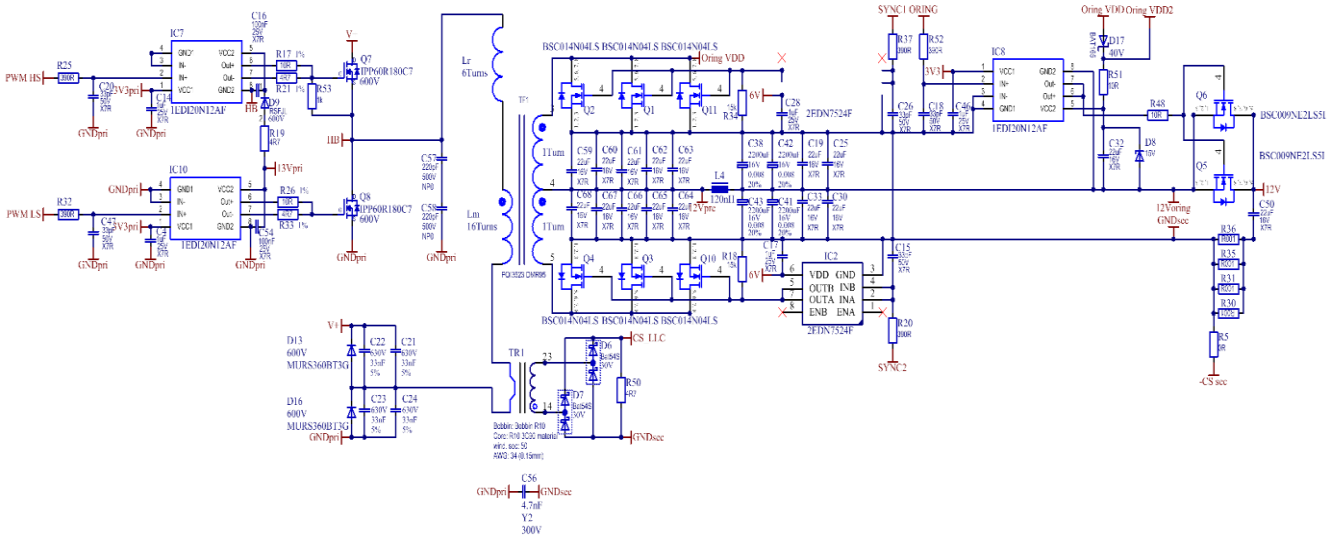

AUX SMPS stage schematic

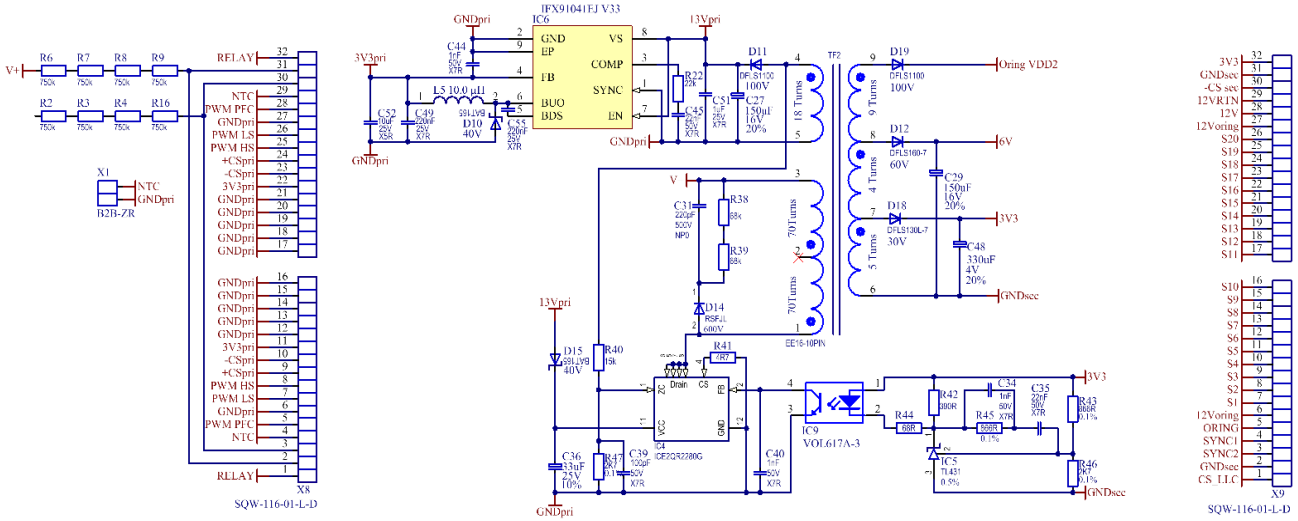

Copyright © Infineon Technologies AG 2017. All rights reserved.

Digital control board schematic - I
Microcontroller circuitry for PFC converter

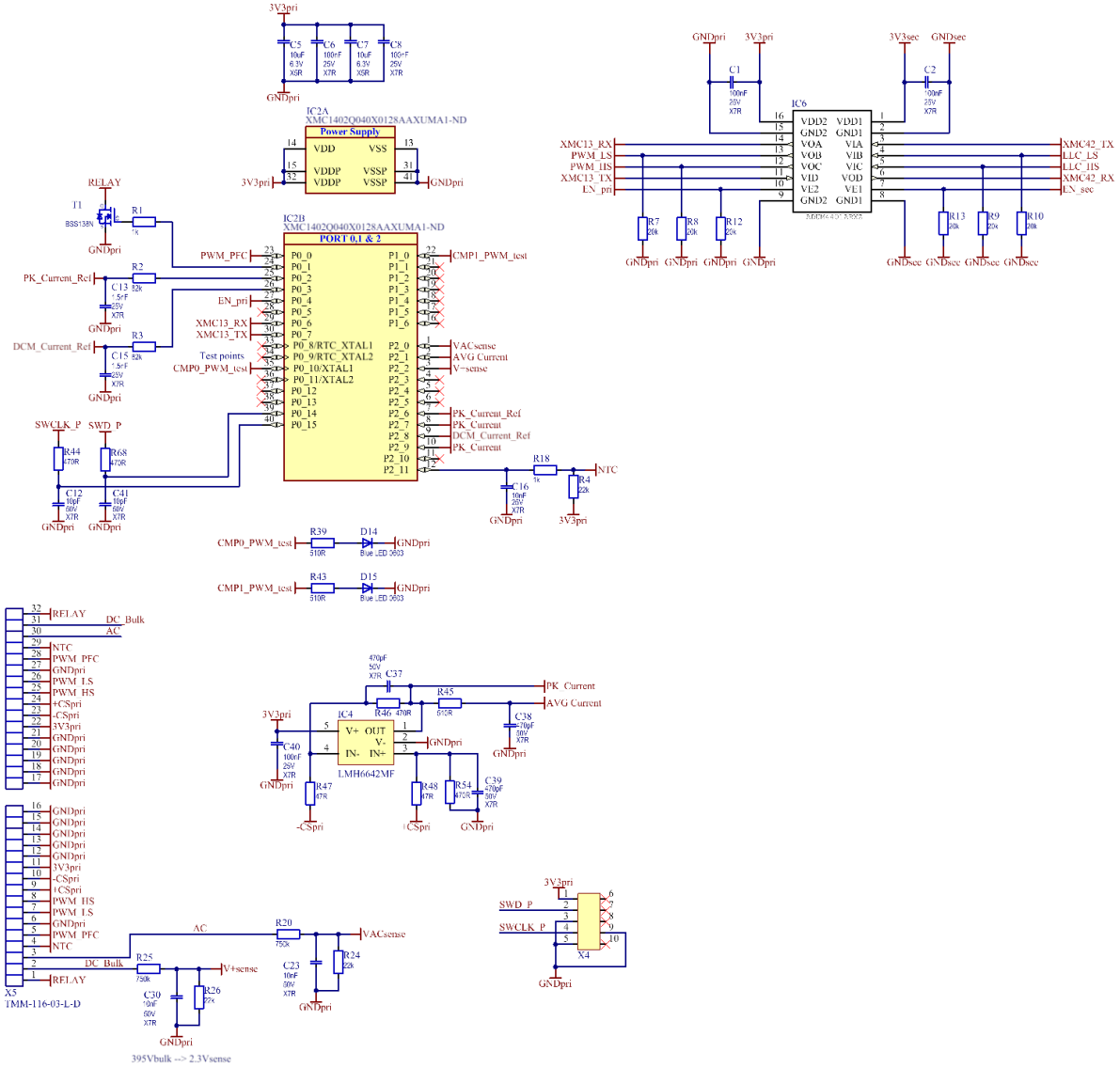

Copyright © Infineon Technologies AG 2017. All rights reserved.

Digital control board schematic - II
Microcontroller circuitry for LLC converter

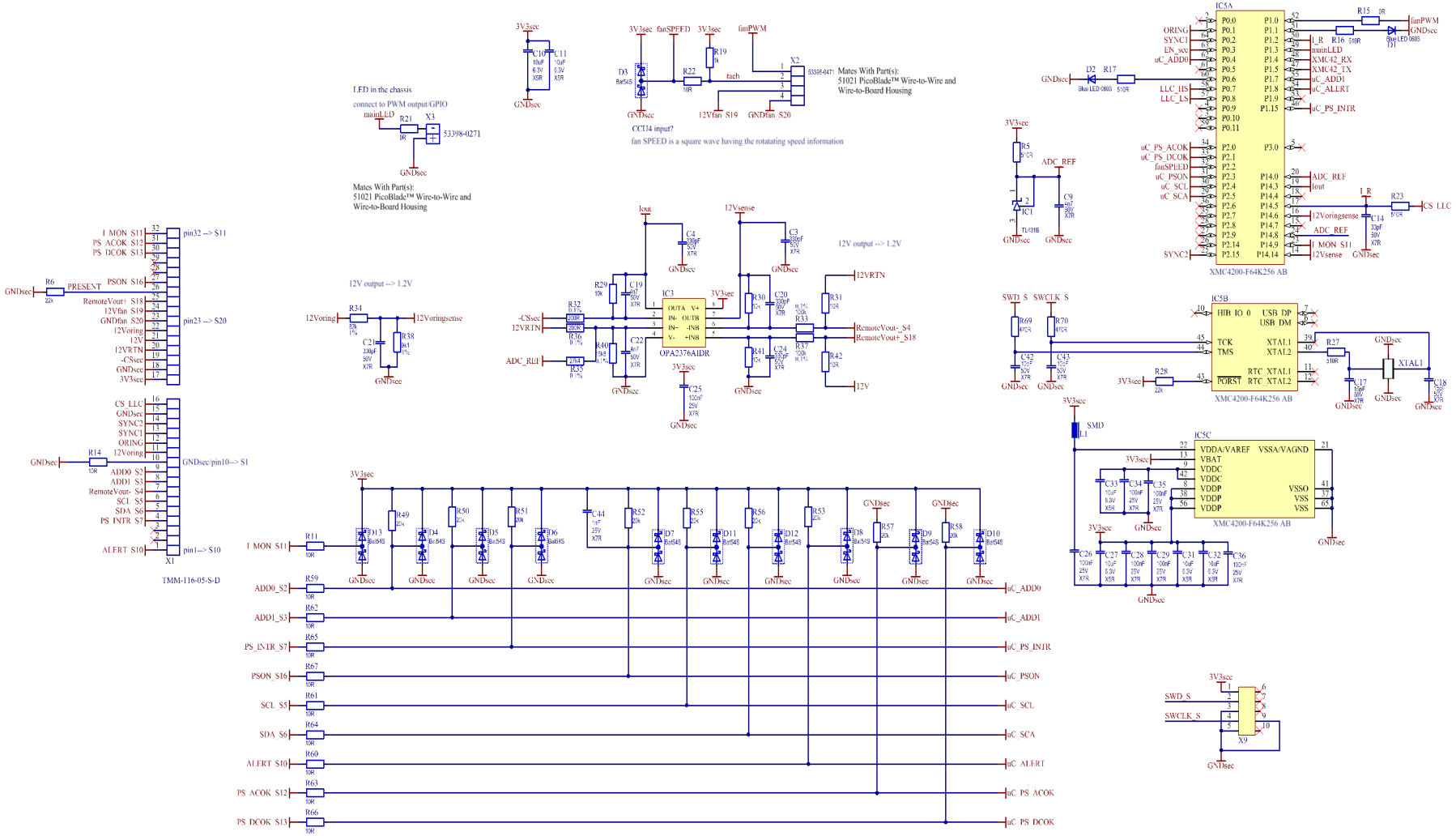

Copyright © Infineon Technologies AG 2017. All rights reserved.

Table of Contents

1 General description

2 Efficiency results

3 Design concept

Copyright © Infineon Technologies AG 2017. All rights reserved.

Automated efficiency measurement

80Plus® platinum standard

The target efficiency level of the 800 W server power supply is platinum efficiency according to 80Plus® standard. As shown this efficiency level is reached with a wide margin, which makes the obtained efficiency close to the titanium level for light and full load.

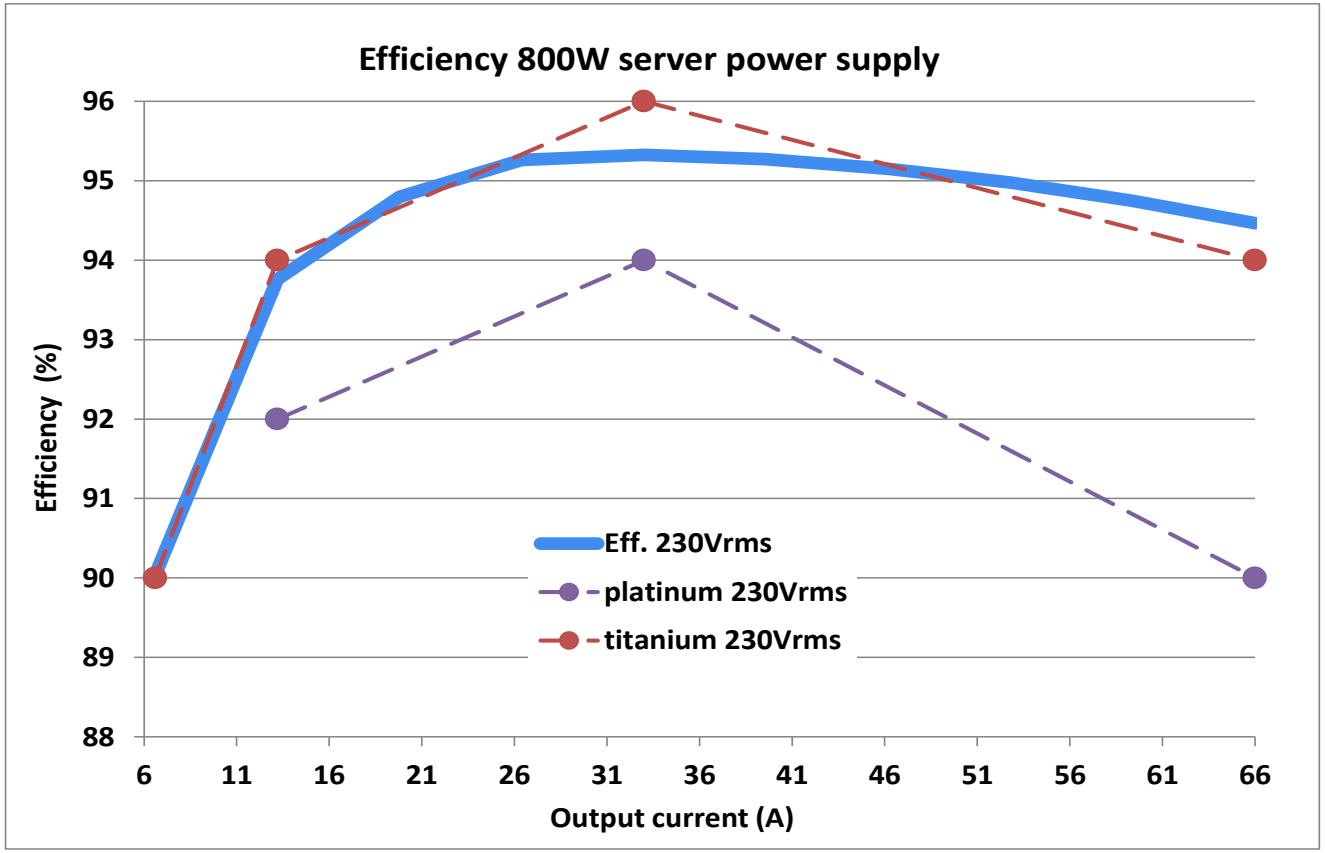

Copyright © Infineon Technologies AG 2017. All rights reserved.

Table of Contents

1 General description

2 Efficiency results

3 Design concept

Copyright © Infineon Technologies AG 2017. All rights reserved.

Design Concept

Key features

- Attractive **compact design** in 30 W/in^3 form factor
- **Efficiency** that outperforms the Platinum® efficiency standard throughout the entire load demand at both 115 V_{AC} and 230 V_{AC} as shown in performance and steady-state operation
- **Low Total Harmonic Distortion** and **high Power Factor** response, as shown from 20% of the load
- **Fully digital control** implementation in both the PFC Boost converter using XMC1400, as described in the Power Factor Correction Stage section, and the LLC resonant converter using the XMC4200, as described in the LLC Resonant DC-DC converter section
- **Robust** and **reliable** operation under different abnormal conditions:
  - Smooth inrush current during start-up
  - Brown-out reaction
  - Load step response at different abrupt load changes
  - Over current condition reaction as described in the Overcurrent protection section as well as the response of the power supply unit under a short circuit event
- Fully compliant with both peak and average Class B conducted **EMI EN 55022** standard limits.

High performance achived by using Infineon Technologies best-in-class devices:

- Single 600 V CoolMOS™ C7 Superjunction MOSFET in TO-247 4pin in the PFC Boost converter along with a single CoolSIC™ Schottky Diode 650 V G5 in TO-220
- 600 V CoolMOS™ C7 Superjunction MOSFET in TO-220 on the primary side of the LLC resonant converter and OptiMOS™ 5 40V and 25V as Synchronous Rectification and O-Ring MOSFETs, respectively
- EiceDRIVER™ 1EDI isolated and EiceDRIVER™ 2EDN non-isolated gate drivers ICs
- Quasi-resonant flyback controller ICE2QR2280G CoolSET™

Copyright © Infineon Technologies AG 2017. All rights reserved.

Design Concept

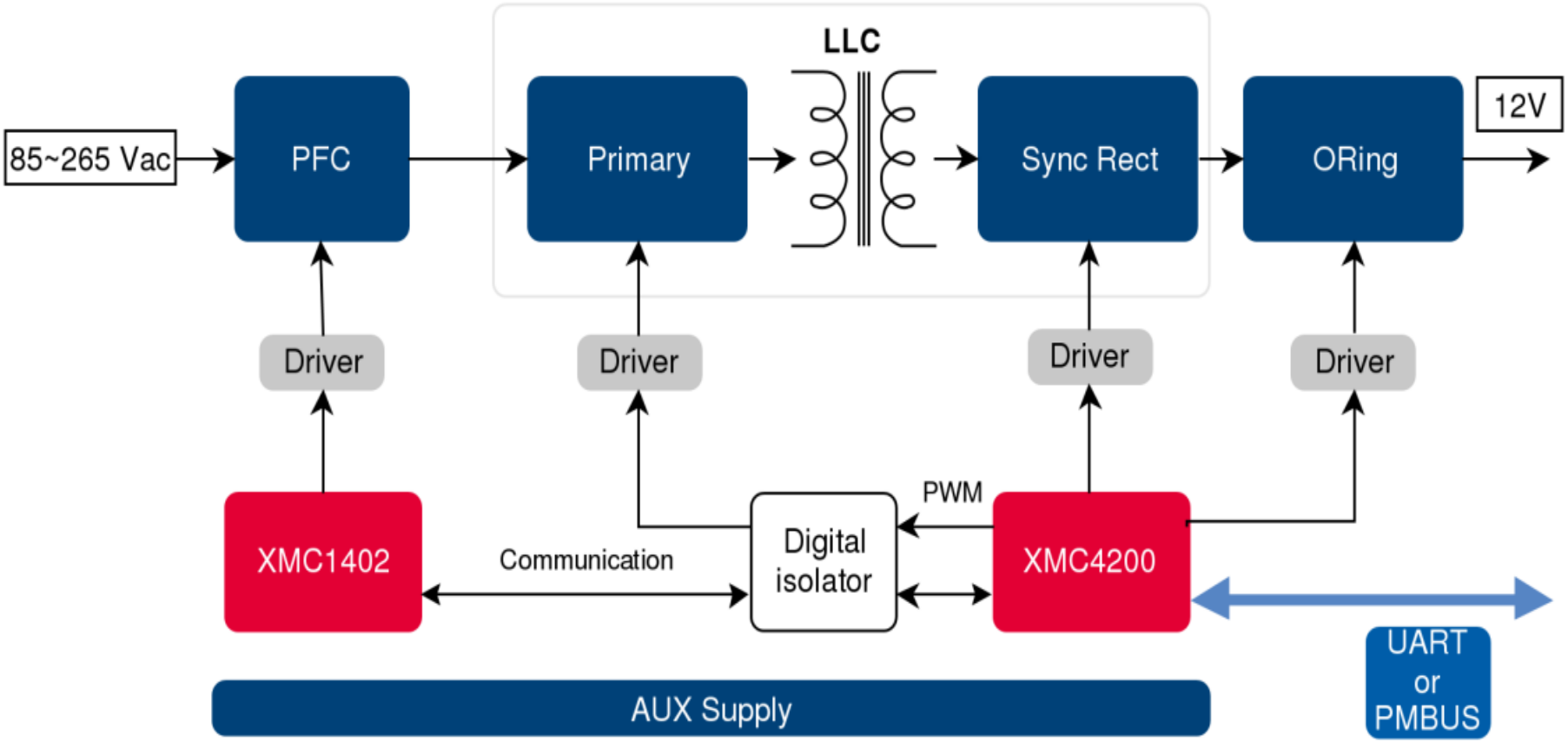

Copyright © Infineon Technologies AG 2017. All rights reserved.

Power factor correction (PFC) stage

The AC-DC stage of the 800 W server power supply is a classic PFC boost converter. The schematic presents the implemented topology, which uses a single 600 V CoolMOS™ C7 MOSFET, a CoolSIC™ Schottky Diode 650V G5 and a 1EDI EiceDRIVER™. The Infineon microcontroller XMC1402 is used for the PFC control implementation.
The boost converter is operated at 65 kHz and provides, from universal AC input voltage range, a regulated bulk voltage to the DC-DC converter stage of around 395 V – 405 V. The active PFC functionality is implemented in this AC-DC stage in order to demand a high quality current waveform from the grid, according to the input requirements specified in the previous section.

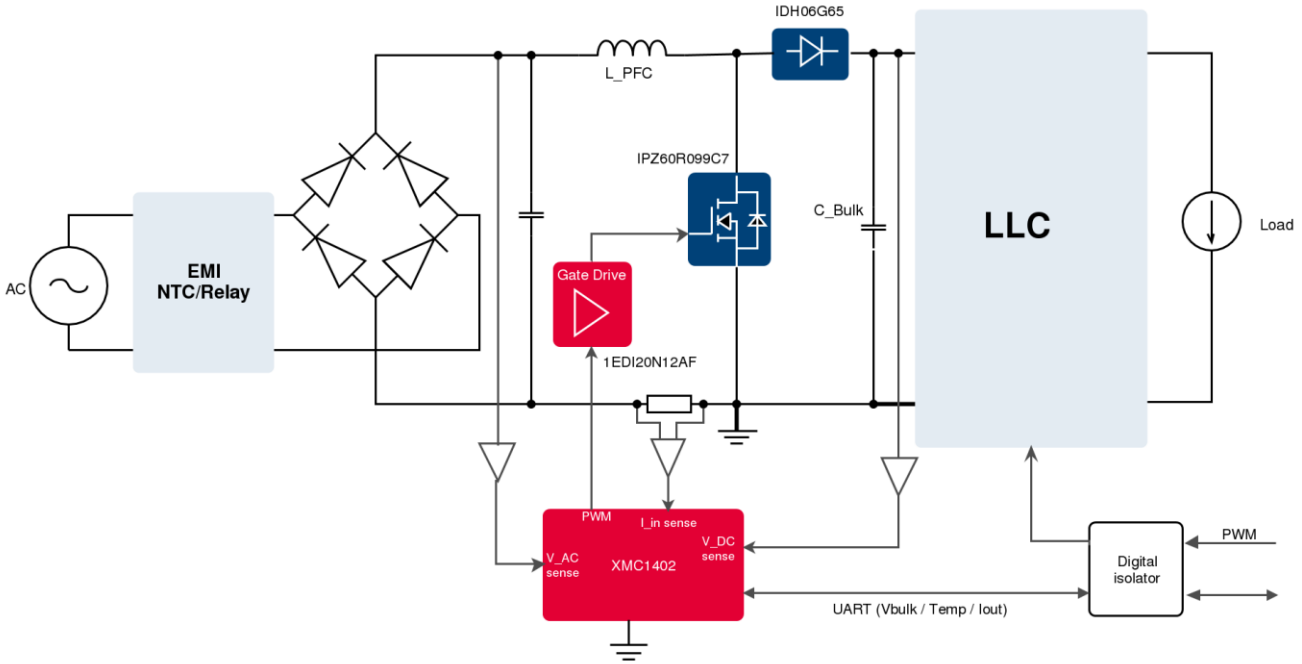

Copyright © Infineon Technologies AG 2017. All rights reserved.

XMC™ configuration for the PFC converter

The AC-DC stage of this 800W power supply performs power factor correction by a digital implemention of an average current control, in a classic continouos conduction mode (CCM) boost converter. The figure below shows the XMC1400 peripherals used for the voltage and control loops for the proper operation of the PFC.

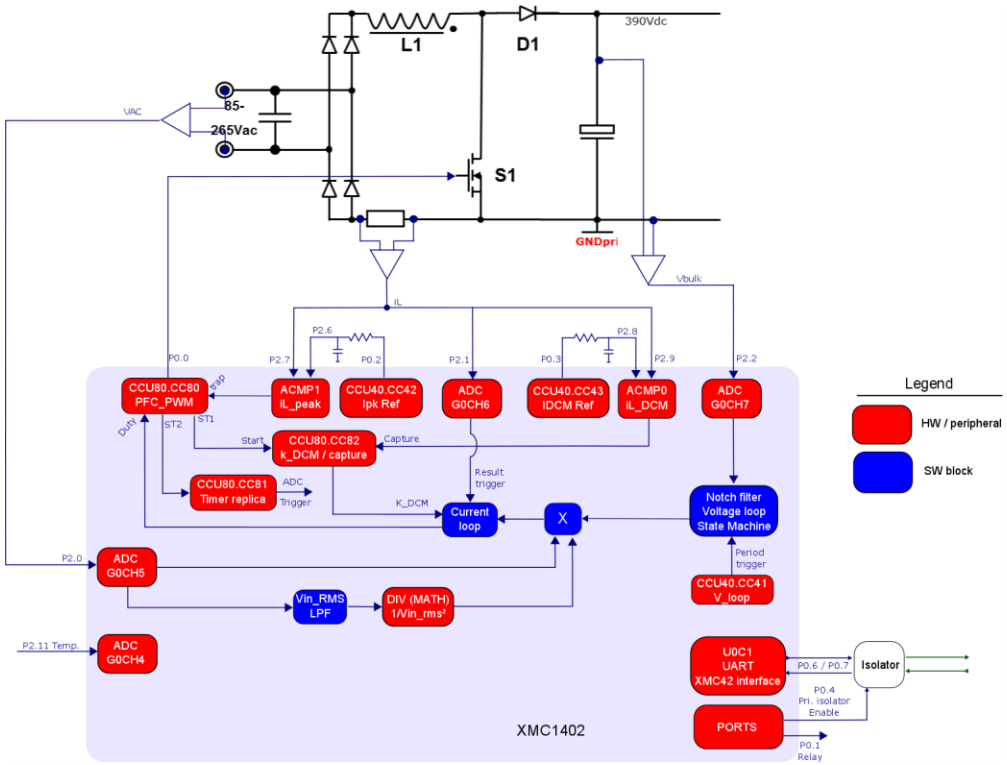

Copyright © Infineon Technologies AG 2017. All rights reserved.

LLC Resonant DC-DC Converter

The DC-DC stage of the 800 W server power supply is a half-bridge LLC resonant converter with split capacitors and center-tap transformer configuration. The implemented topology is depicted, which includes 600 V CoolMOS™ C7, OptiMOS™ 5 40V, 1EDI and 2EDN EiceDRIVER™ and XMC4200 as controller. Since the selected microcontroller is located in the secondary side, a digital isolator is used for communication with the PFC controller. In addition, the inclusion of this digital isolator allows sending the PWM signals to the half-bridge drivers without using pulse transformers. The DC-DC stage includes as well the O-Ring switch.

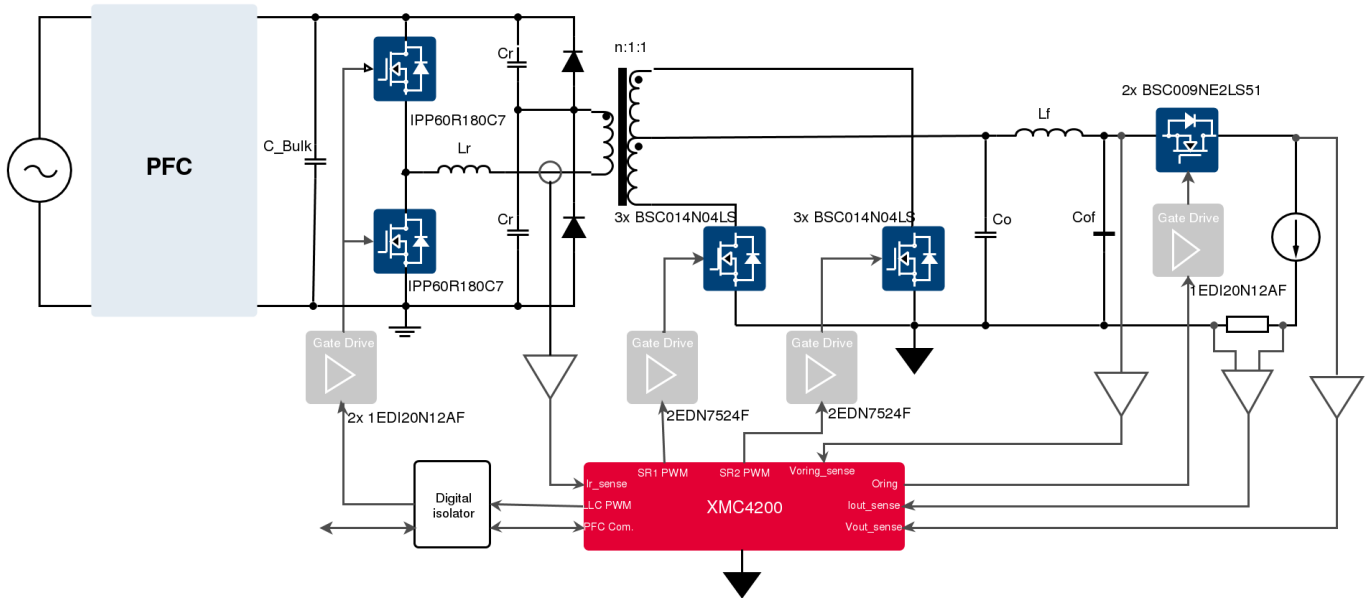

Copyright © Infineon Technologies AG 2017. All rights reserved.

XMC™ configuration for the LLC converter

The control of the DC-DC stage in the 800 W server power supply is implemented in a XMC4200. The picture shows a block diagram of the HW (red) and SW (blue) resources used for the control implementation.

As a resonant converter, the LLC requires frequency modification (60 kHz - 300kHz) in order to keep voltage regulation. Therefore, if the control loop is synchronized with the switching frequency, the necessary operations for control loop calculation must be executed in a maximum time which corresponds to the minimum switching period. In addition, more functions than the control loop are typically implemented in the controller which makes complicated the synchronization of the control and the switching frequency. This is the reason to include a fixed frequency interrupt (100 kHz) to implement the following functions, which will be covered in this section

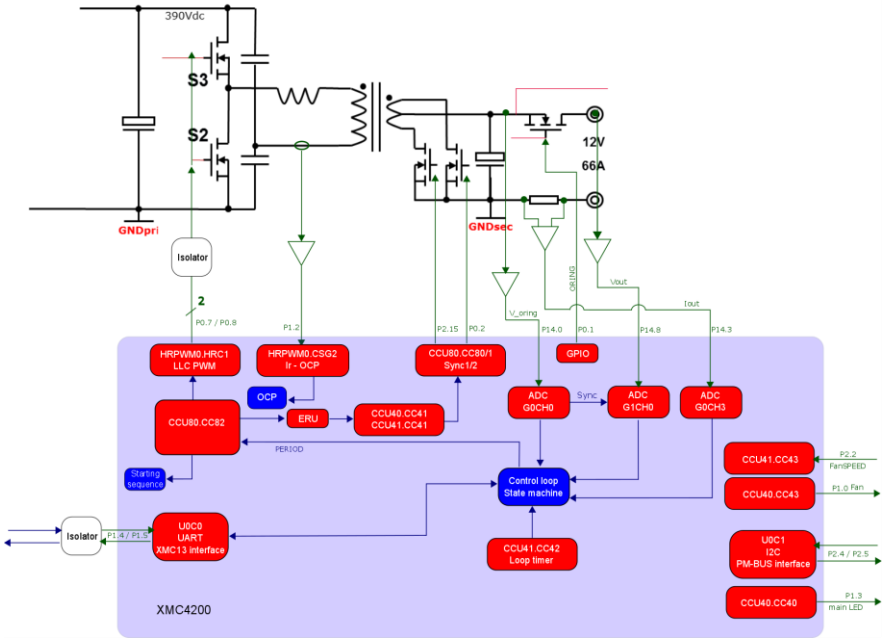

Copyright © Infineon Technologies AG 2017. All rights reserved.

PFC Inductor

The PFC choke design is based on a toroidal high performance powder core. Toroidal chokes have a large surface area and allow a good balance, minimizing core and winding losses, and achieving a homogeneous heat distribution without hot spots. Hence they are suitable for systems which are targeting the highest power density with forced air cooling.

The core material chosen was Chang Sung Corporation's (CSC) HS, which has a good trade-off among DC bias, core losses and temperature stability, while its cost is lower than for HighFlux. The part number is HS270060, with an outer diameter of 27 mm and 60 µ permeability.

The built inductor has 90 turns with a small signal bias inductance of 617 µH. The effective inductance respect to the current bias is determined by the permeability variation of the core with the DC magnetizing force (H) and illustrated in the figure below

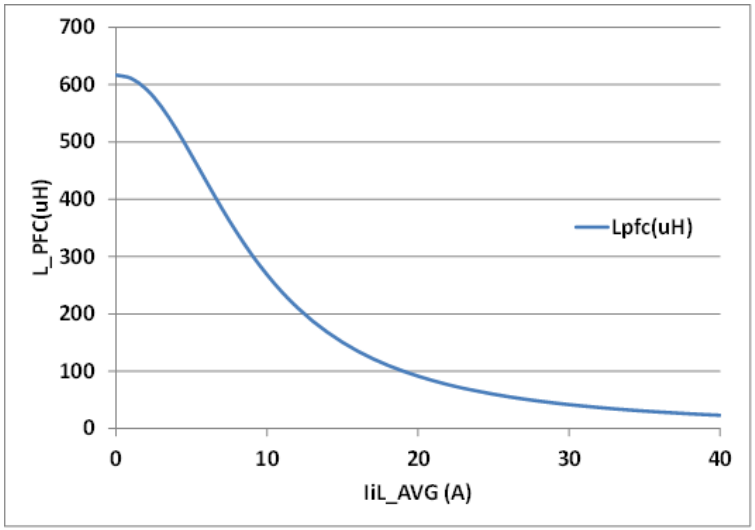

Copyright © Infineon Technologies AG 2017. All rights reserved.

Transformer and resonant inductor

Two main value drivers for the presented server power supply are the high performance and power density. Having these parameters in mind, the main transformer and the required resonant inductance have been integrated. The resulting magnetics integration, which takes advantage of the flux cancellation, is shown in the picture.

The transformer and resonant inductor are both built using PQI35/23 cores. The secondary windings are implemented using 0.6mm thickness copper foils. The primary side turns are wound between the copper foils, thus improving the transformer coupling, using 7 mm x 0.3 mm litz wire. The same wire is used for the resonant inductor turns, which are in series with the transformer primary windings.

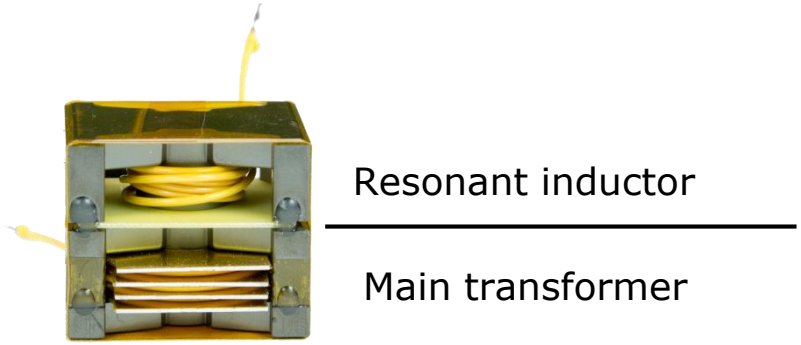

Copyright © Infineon Technologies AG 2017. All rights reserved.

Evaluation Board
EVAL_800W_PSU_4P_C7

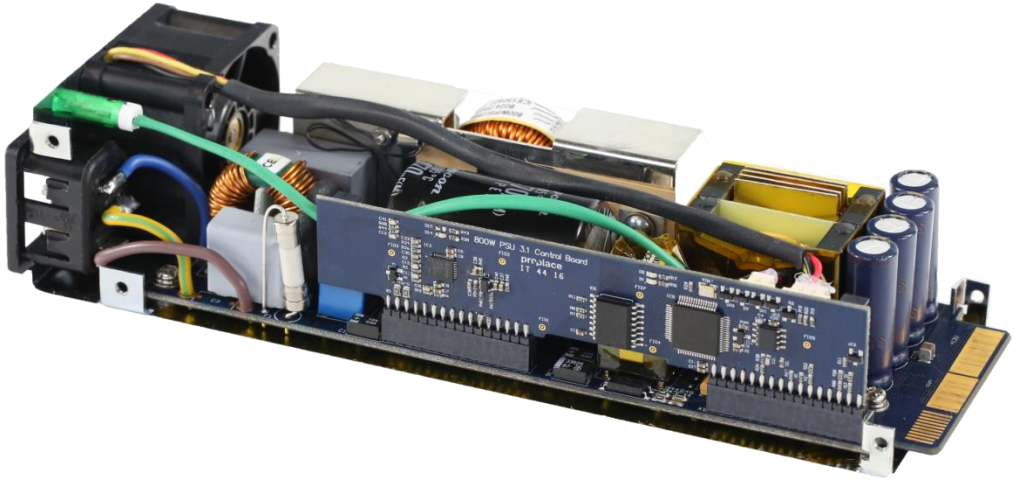

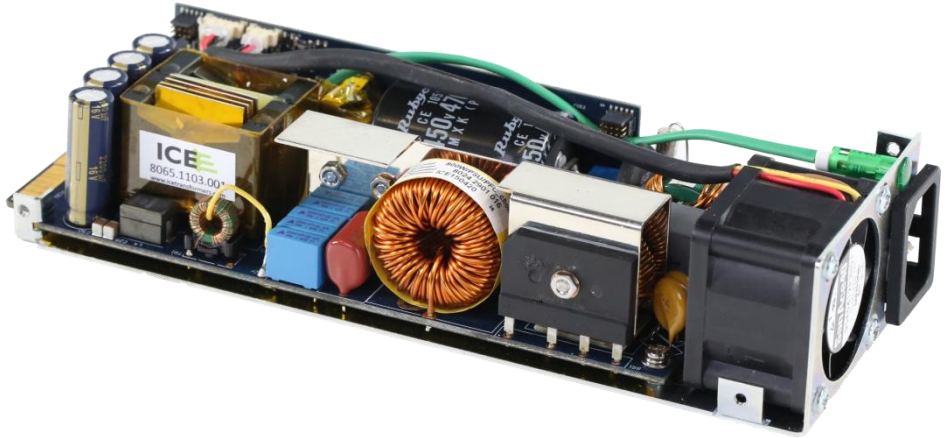

Copyright © Infineon Technologies AG 2017. All rights reserved.

Support Slides
800W Server PSU Evaluation Board

Evaluation Board Page

- Technical Description
- Datasheets
- Parameters
- Related material
- Videos

EVAL_800W_PSU_4P_C7

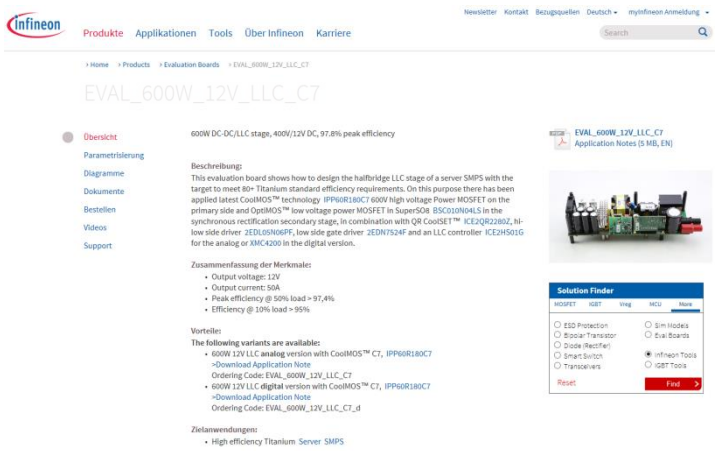

Product Family Pages

- Product Brief
- Application Notes
- Selection Guides
- Datasheets and Portfolio
- Videos
- Simulation Models

Copyright © Infineon Technologies AG 2017. All rights reserved.



Part of your life. Part of tomorrow.

Infineon